AM Instrumentering AS
Product Catalogue

Since 1994 we have been supplying the offshore, land and shipping industries.

Address
AM Instrumentering AS
Storevaagen 75
6020 Aalesund
Norway

Contact
Phone +47 70 17 69 69
Fax +47 70 14 65 20
Email kontor@aminst.no
www.aminstrumentering.com

Pressure/Level Sensor
MAS2600

Advantages:
•Titanium housing and diaphragm.
•Resistant to sea water and chemicals.
•Silicon strain gauge sensor.
•EMI protected.
•Interchangeable with existing transmitters.
•Programmable from 0.2 to 35 mH^2O
•Strong, light and extremely corrosion resistant.

Description

The MAS 2600 tank contents transmitter is an electronic based transmitter designed for tank contents measuring application.
The MAS 2600 is a 2-wire 4-20 mA level transmitter consisting of a transducer and an amplifier connected via a 6-core vented cable.
The transducer is fully welded, housed in titanium with a titanium diaphragm and is submersible (IP68).
The amplifier is housed in a sea water-resistant polyester casing (IP56).
The transducer is a pressure sensitive silicon micro strain gauge sensor mounted in a glass to metal seal. The sensor is protected by an isolation diaphragm, electron beam welded to the trans-ducer housing, with an oil filling between the sensor and the diaphragm.
Pressure changes in the front of the diaphragm will bring about a resistance change in the Whetstone bridge of the transducer.
This change in the Whetstone bridge will be transmitted to the amplifier as a change in the electrical signal.
The MAS 2600 is manufactured in 4 programmable ranges from 0-3.5 mH^2O to 0-35 mH^2O, and available with a built-in Pt100 Sensor.

Application:

The MAS2600 has been developed for level measuring in ballast, oil, service and fresh water tanks
as well as tanks containing media which are not hostile to titanium.

Type Approvals:

DNV, GL, LRS, MRS, BV, RINA, KRS, ABS, PRS.
CE marked in accordance with EU directive

For more applications, info, and details, visit our web site or contact Us.

Sensor Type:

MAS2600-G20-05-0/00
MAS2600-G20-10-0/00
MAS2600-G20-15-0/00
MAS2600-G20-20-0/00

MAS2600-G30-05-0/00
MAS2600-G30-10-0/00
MAS2600-G30-15-0/00
MAS2600-G30-20-0/00

MAS2600-G40-05-0/00
MAS2600-G40-10-0/00
MAS2600-G40-15-0/00
MAS2600-G40-20-0/00

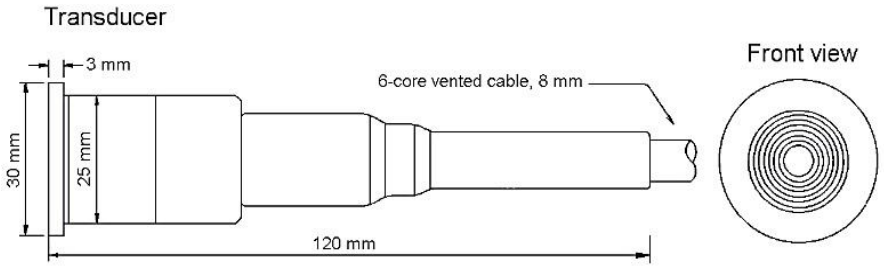

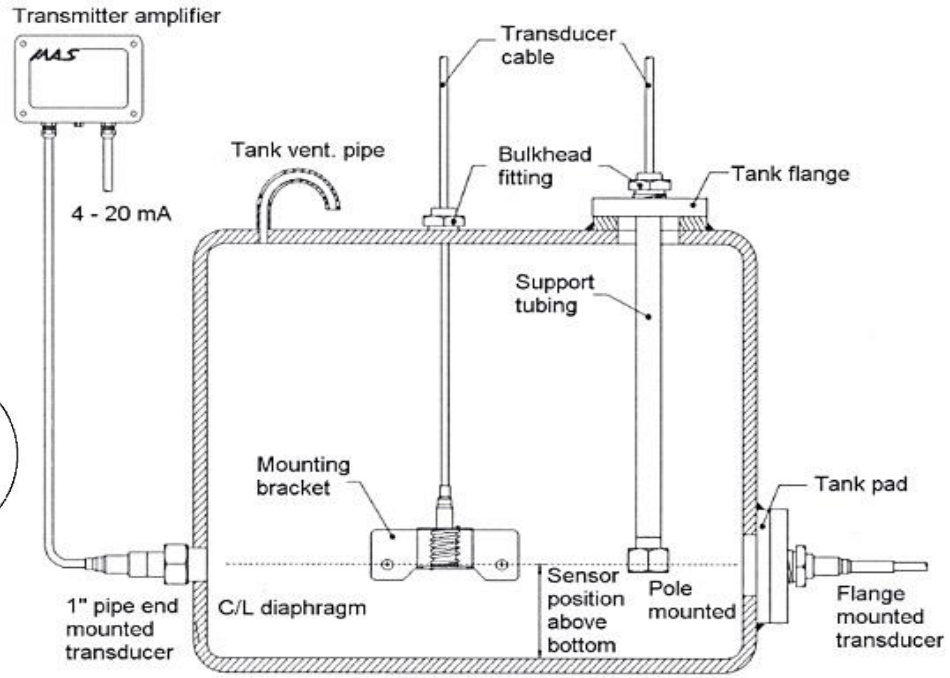

Rosemount 520
Pressure/Level Sensor

Specifications

Communication Protocol 4-20mA / HART
Enclosure Rating IP68
Operating Temperature -40 to 85C
Housing Material Titanium
Dimensions Ø = 25 mm, height=193 mm
Weight 0.17 kg
Explosion Protection Ex ia IIC T4 Ga

Features

- Designed and approved for harsh marine environments.
- Suitable for installation in virtually any tank gauging application.
- Enhanced performance with 5-year stability guarantee.
- HART® capabilities.
- Superior overpressure protection ensures trouble-free ownership.
- Engineered to reduce calibration frequency, reducing your maintenance costs.
- Wide range of installation options makes the transmitter suitable for all tank types.
- Up to 25:1 rangeability not only allows you to be flexible, but also reduce inventories.

Dimensional Drawings
Rosemount 520 Level Transmitter

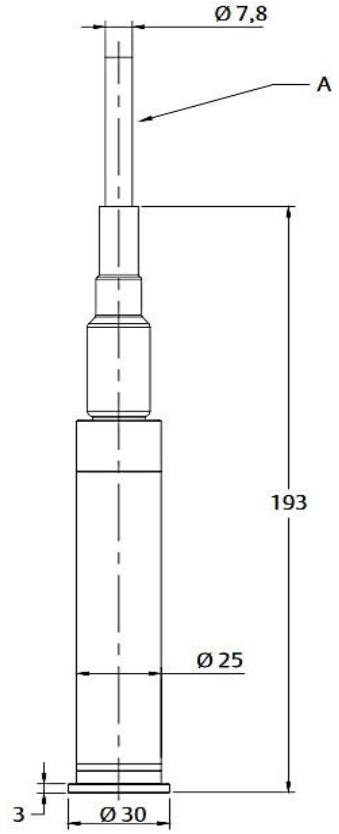

A. Transmitter cable

For more applications, info, and details, visit our web site or contact Us.

Pressure/Level Sensor MAS2600

Installation Accessories

Skotte 500 – 1000
For cable penetration
Stainless steel

Skotte 500 – 1000
For cable penetration

Pole Mounting
Stainless steel

Pipe End Mounting
Stainless steel

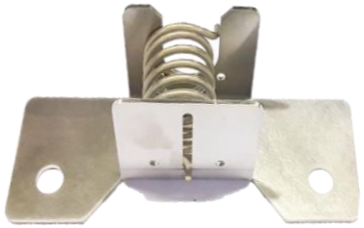

MAS2600 Bracket for internal mounting Stainless steel

DN25
DN40
DN50

Flange Mounting
Stainless steel

For more applications, info, and details, visit our web site or contact Us.

Test Calibrator Kit
For MASS2600 Pressure/Level Sensor

MAS2600 PRESSURE CALIBRATOR KIT
The MAS2600 Pressure Calibration KIT consists of all you need to make highly accurate pressure calibrations and is supplied in a carry case.
The Calibrator KIT includes the DPI802P Calibrator, PV210 Hand Pump, Carry case, MAS2600 test cup and a MAS2600 amplifier connector.

DPI802P Calibrator
- Pressure indicator.
- mA measure with 24V loop power.
- Switch test.
- Leak test.
- HART resistor.
- Large dual display with back-light.
- Range: -1 to 3,5 bar.
- Accuracy: 0.01% FS.
- Power supply: 3 x AA Alkaline batteries.
- Duration: >50 hours (measurement) >10 hours (24V source at 12.5 mA).

PV210 Hand Pump
The PV210 low pressure pneumatic hand pump is fully portable and easy to use. This precision unit gives pneumatic pressure and vacuum.
Range: -0.9 to 3.0 bar.

Test Calibrator Kit for MAS2600

PV210

For more applications, info, and details, visit our web site or contact Us.

Level Sensor
Klay Sann 8000

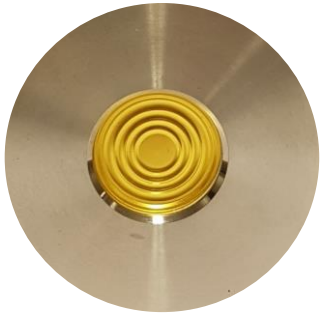

Klay Sann 8000

- STRONG DIAPHRAGM
- ACCURACY 0,2% or 0,1%
- ZERO/SPAN ADJUSTABLE
- HIGH BURST PRESSURES
- RUGGED AND COMPACT DESIGN
- OUTPUT 4-20 mA
- TEMPERATURE COMPENSATED
- INTRINSICALLY SAFE ATEX II 1 G Ex ia IIC T4 Ga

The series 8000-SAN is a range of "All Stainless steel" pressure / Level transmitters with a strong "flush mounted diaphragm" which can withstand high overpressures. Zero and span are internally adjustable over a wide range and the accuracy is 0.2% from adjusted span.

Typical applications are:

Level measurement on: Cargo tanks, Service tanks like fresh water and waste water tanks, HFO tanks, Liquid mud / brine tanks, etc.

Specifications series 8000:

Accuracy : 0,2% from adjusted span
Ranges : 0,08 bar to 350 bar
Output : 4-20 mA, 2-wire
Power supply : 12 to 36 Vdc (Exi: 13-26,5 Vdc)
Protection : IP66 (option: IP68)
Process temperature : -20ºC to + 100ºC
Wetted parts : AISI 316L (standard)
Gold plated diaphragm

Order code: 8000-San-E-F-Ex-G9-16-31

Order code		8000-						
Order code for Flanged process connection		8000-SAN-		F				
measuring range (bar)	maximum overpressure (bar)	adjustable span-range min. - max.(bar)						
0 - 0,1 ...0,4	6,4	0 - 0,1 / 0 - 0,4	B					
0 - 0,4 ...0,7	6,4	0 - 0,4 / 0 - 0,7	C					
0 - 0,7 ...1,5	10,5	0 - 0,7 / 0 - 1,5	D					
0 - 1 ...4	16	0 - 1 / 0 - 4	E					
0 - 2,5 ...10	30	0 - 2,5 / 0 - 10	F					
0 - 7,5 ...16	80	0 - 7,5 / 0 - 16	G					
0 - 16 ...50	120	0 - 16 / 0 - 50	H					
0 - 20 ...80	200	0 - 20 / 0 - 80	I					
PROCESS CONNECTIONS:								
- G1" (1" BSP) threaded connection (flush diaphragm)				S				
- Flanged DIN or ANSI, all sizes available (specify size)		**Typecode: 8000-SAN-range-**		F				
OPTIONS:								
- Digital local Indicator 3½ digit, programmable					I			
- Vacuum Ranges (Specify relative or absolute). Compound range available (example -1 / +1 bar)						V		
- Intrinsically safe: ATEX Ex II 1 G EEx ia IIC T4							Ex	
- IP68 protection, vented cable mounted on cable entry (Specify cable length).								G6
- Hasteloy C diaphragm								G7
- Electronics housing AISI 316 (AISI 304 is standard)								G9
- Gold plated diaphragm								G16
- Process connection ½" BSP M. (By adapter)								G21
- Process connection ½" NPT M. (By adapter)								G35

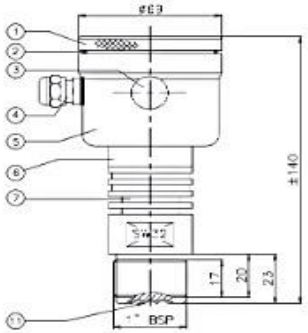

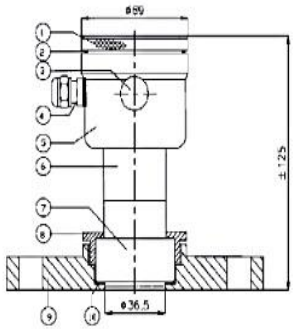

For more applications, info, and details, visit our web site or contact Us.

VEGAFLEX 81

4 … 20 mA/HART – two-wire
TDR sensor for continuous level and interface measurement of liquids
Application area:
With VEGAFLEX 81 you can measure all kinds of liquids essentially maintenance free. The sensor delivers precise and reliable measured values even in applications with steam, build-up, foam generation or condensation. VEGAFLEX 81 is a truly cost-effective level and interface sensor for your measuring task.
Your benefit:

- The guided adjustment enables a simple, time-saving and reliable setup
- Comprehensive diagnosis options ensure maintenance-friendly operation and thus high plant availability
- Short enable probes allow simple standardization and maximum flexibility in planning

Function:
High frequency microwave pulses are coupled onto a cable or rod and guided along the probe. The pulse is reflected by the product surface. The time from emission to reception of the signals is proportional to the level in the vessel.
Technical data:
Measuring range
-Cable probe up to 75 m (246.1 ft)
-Rod probe up to 6 m (19.69 ft)
Measuring accuracy ± 2 mm
Process fitting Thread from G¾, ¾ NPT; flanges from DN 25, 1”
Process pressure -1 … +40 bar/-100 … +4000 kPa (-14.5 … +580 psig)
Process temperature -40 … +200 °C (-40 … +392 °F)
Ambient, storage and transport temperature -40 … +80 °C (-40 … +176 °F)
Operating voltage 9.6 … 35 V DC

For more applications, info, and details, visit our web site or contact Us.

VEGACONNECT

display and adjustment module

VEGATRENN 149A Ex

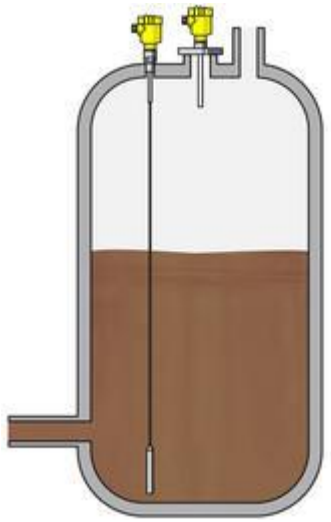

Magnetic Level Switches'

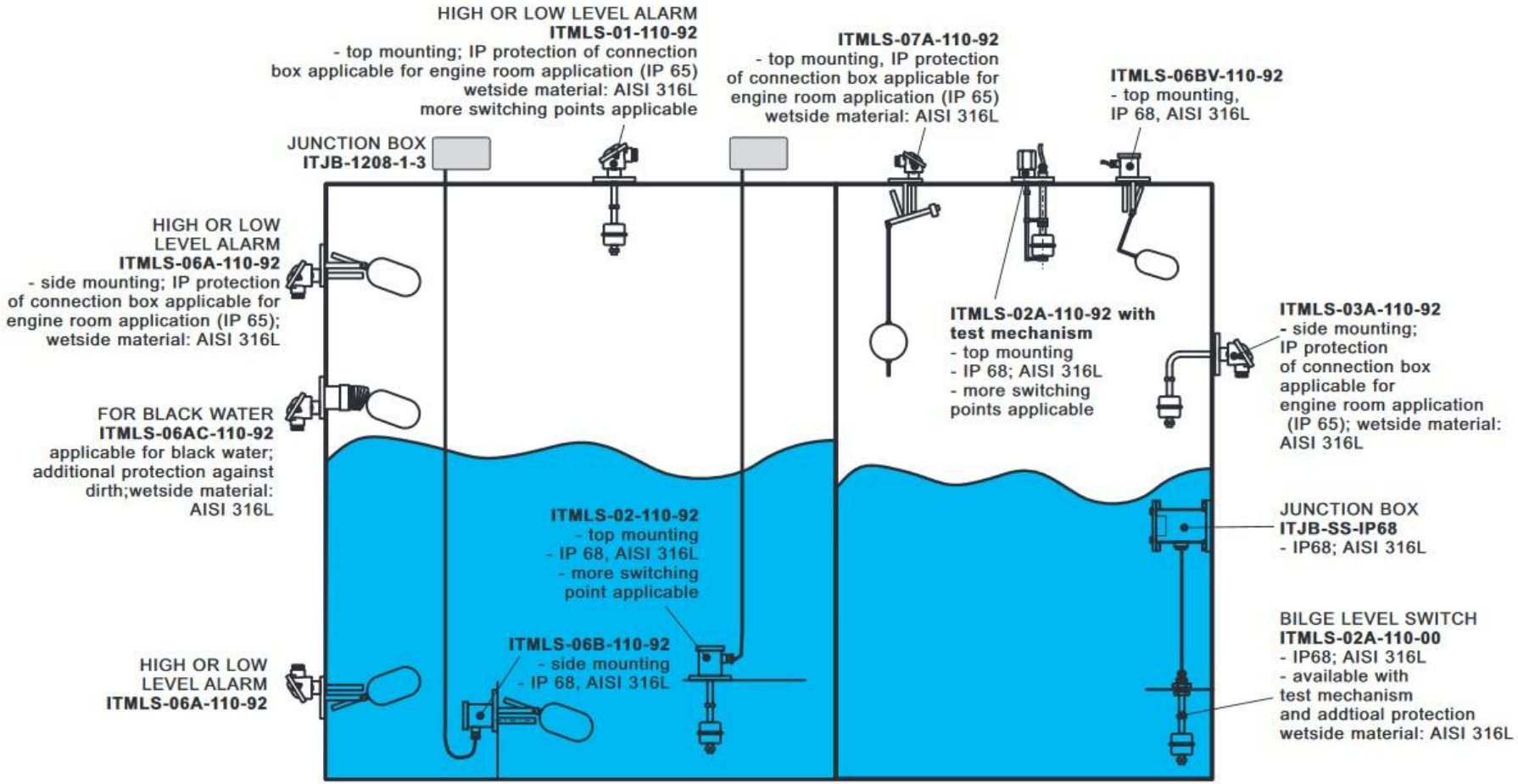

NOTES:
All level switches possible with test mechanism. Higher IP protections on request.Other process connections on request. For more details and dimensions pls. check drawings.

Lidec Level Switch
Alarm Sensors

Series
L20D – 70D
L20D, 75mm – 120mm – 200mm

The **Lidec level switch type L20D**, designed for maritime applications, is based on the wave propagation in metal principle.
This Concept is completely static, without vibrations or moving parts. The reliability of the device is ensured by a self-monitoring function which signals electronic or transducer failures. Lidec L20D is designed to be installed horizontally (or vertically). Also, it requires no calibration as not influenced by type of fluid.

Technical data:
•Accuracy: ± 2mm
•Pressure: 25 bars
•Protection class: IP65
•Intrinsically safe Cenelec EEX ia IIC T6
•Power supply: 18 to 36 VDC (28 VDC max. for I.S.)
•Operating temperatures:
– ambient temperature: – 25 °C +70°C
– liquid temperature: – 40 °C +150°C

Special features:
•Head: Aluminium
•Probe: Stainless steel 316L
•Lengths: L= 75, 120 or 200mm
•Fitting, 1/2" BSP
•Current output:
L20D: in liquid 6 mA
outside liquid 18 mA

Setting with relay option

No jump on L20-70D

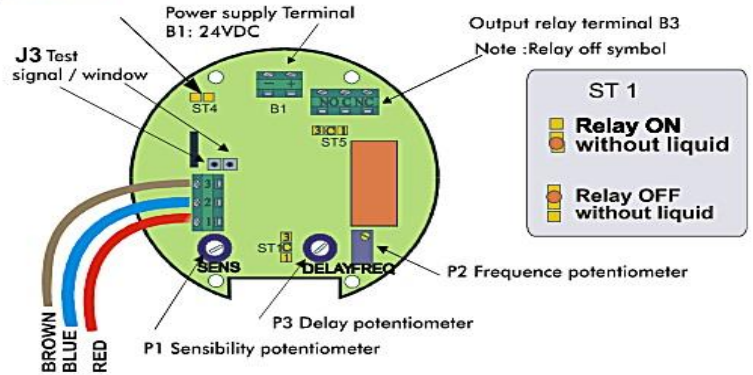

OUTPUT SETTING

ST4 and ST5 are factory preset

ST1 :

Setting without relay option

No jump on L20-70D

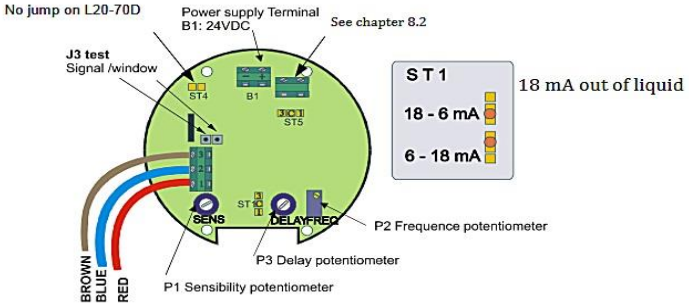

L20-70 D- Polyester housing

L20-70 D- Polyester housing
Description:
•The Lidec type L20-70D, is specially designed for water ingress detection and offers a dependable solution for detecting the presence of liquids within dry cargos. The Lidec L20-70D is based on the propagation of a surface wave. This design does not include any moving part. The reliability of the device is ensured by a built-in function which monitors electronic or transducer failures.
•The polyester housing is designed to be installed in areas protected against adverse weather conditions. The Lidec L20-70D does not require any calibration as it is not influenced by the surrounding cargo (e.g. coal,
cement, or any powdery substance).

Technical data:
•Accuracy: ±2mm
•Operating temperature: -25°C to +60°C
•Cargo temperature : up to 70°C max.
•Intrinsically safe: II 1 G/D EEx ia IIC T5
II 1 G/D EEx ia IIB T5
•Power supply: 18 to 28 Vdc (24 Vdc nominal)
•Protection class:
IP66 for connecting box
IP68 for sensor up to 100m depth
Special features:
•Materials: – Probe: Stainless steel 316L
– Connecting box : Polyester
•Horizontal or vertical mounting
•The L20-70D operates even with cargos that may absorb water to form a past
•Output signal:
20 mA (outside liquid)
7 mA (detection of liquid)
•Cable length: up to 30m max.

For more applications, info, and details, visit our web site or contact Us.

Metering Solutions for Oil depots and terminals.

DEPOT APPLICATIONS:
The Satam line of metering units for depot applications is designed for truck and train tankers loading stations in a top or bottom loading configuration. The compact, vertical or horizontal measuring unit enables easy installation in smaller facilities.

Sectors of application:
- Tanker trucks and railcars loading meters
- Preparation of bio-fuels by means of online or batch blending
- Measurement of white products and bio-fuels
- Additive injection control

Key Points:
- **Low maintenance cost**
Simple and robust construction with minimal moving mechanical components
- **Low installation cost**
Compact metering unit for installation in smaller areas
- **Safe Use**
Measuring system supplied “fully assembled” and tested in the factory in order to ensure maximum reliability
- **Measurement stability and accuracy**
Measurement accuracy guaranteed over a period of many years without any deviation in the calibration curve
- **Modular Design**
Extensive line of accessories to create customised measurement applications

For more applications, info, and details, visit our web site or contact Us.

Cargo Bunkering Flowmeters
SATAM SAS ZC17.80/ 330

ZC.17.80/330

•SATAM SAS type ZC17/330 flowmeter with Veeder Root reset register and Veeder Root pulse transmitter signal to IAS
•Materials: House: NI.-Resist ASTM 436 Type II
*End Cover: Steel
*Wings: Carbon
•Dimensions: DN200 – PN10/16
•Flow range: 33-330 m3/h
•Accuracy: +/- 0,2%
•Repeatability: +/- 0,025%
•Max Temperature: 120ºC
•Max pressure: 10 bar
•Output signal: Pulse transmitter type Veeder Root
•Flow direction: Right to left / Left to Right

Industrial metering units for delivery or rec**SATAM ZC17-SERIES POSITIVE DISPLACEMENT METERS**
eption of petroleum products such as gasoline, diesel, domestic fuel oil, kerosene and more.

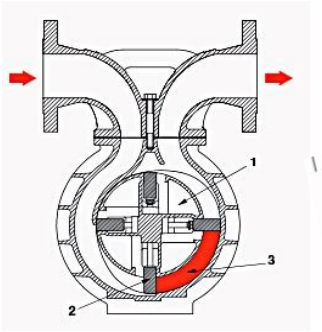

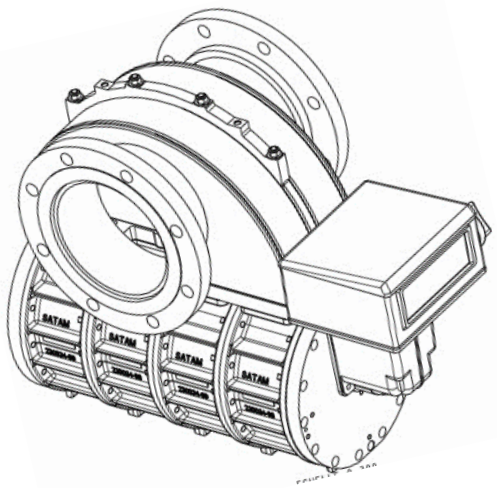

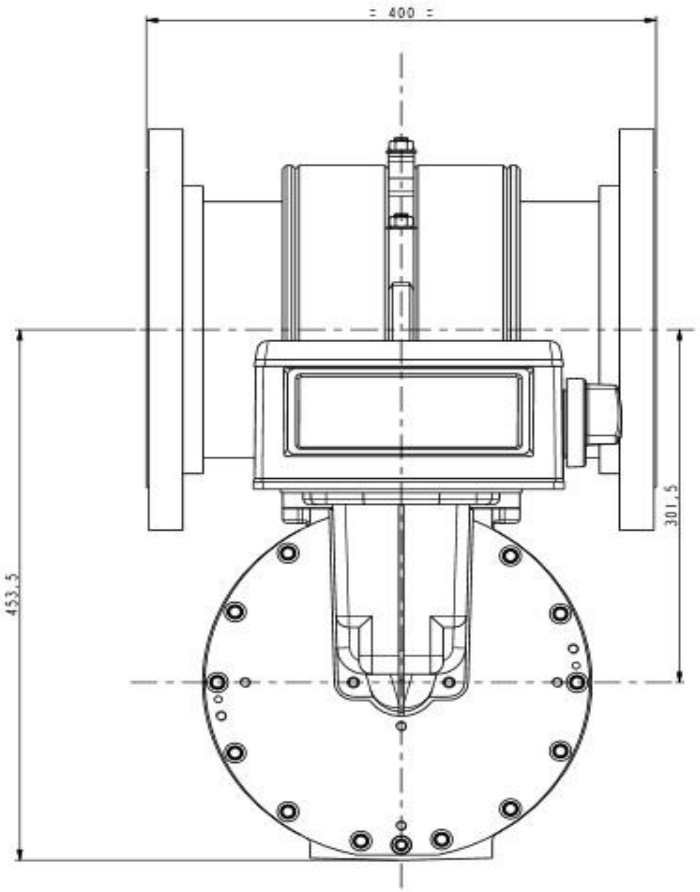

Benefits:

- Special design featuring an in-line manifold and a separate measuring chamber. This protects the measuring chamber from any eventual stress during installation.
- High accuracy over a wide range of flow rates.
- Very low repeatability error, less than 0.04%.
- Low head loss: 0.5 bar max, or 0.3 bar for the ZC17-24 and 48 models.
- Service and maintenance simplified by the use of many identical and interchangeable parts.
- Simplicity of design; the only moving parts being the two sets of blades and the rotor. This keeps maintenance costs to a minimum.
- Can be used for viscous products up to 800 Cps / 3850 SSU.
- A wide range of accessories available to build metering units for your specific needs.

For more applications, info, and details, visit our web site or contact Us.

Cargo Bunkering Flowmeters
SATAM SAS ZCl7.80/ 250 – 80/250

ZC17.80/250

- SATAM SAS type ZC17/250 flowmeter with Veeder Root reset register and Veeder Root pulse transmitter signal to IAS
- Materials: House: NI.-Resist ASTM 436 Type II
  *End Cover: Steel
  *Wings: Carbon
- Dimensions: DN150 – PN10/16
- Flow range: 25-250 m3/h
- Accuracy: +/- 0,2%
- Repeatability: +/- 0,025%
- Max Temperature: 120ºC
- Max pressure: 10 bar
- Output signal: Pulse transmitter type Veeder Root
- Flow direction: Right to left / Left to Right

SATAM ZC17-SERIES POSITIVE DISPLACEMENT METERS

Industrial metering units for delivery or reception of petroleum products such as gasoline, diesel, domestic fuel oil, kerosene and more.

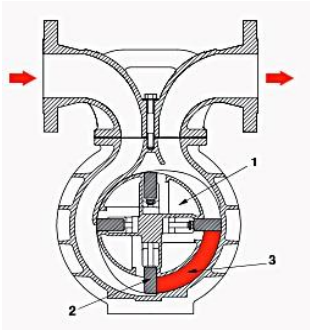

Benefits:

- Special design featuring an in-line manifold and a separate measuring chamber. This protects the measuring chamber from any eventual stress during installation.
- High accuracy over a wide range of flow rates.
- Very low repeatability error, less than 0.04%.
- Low head loss: 0.5 bar max, or 0.3 bar for the ZC17-24 and 48 models.
- Service and maintenance simplified by the use of many identical and interchangeable parts.
- Simplicity of design; the only moving parts being the two sets of blades and the rotor. This keeps maintenance costs to a minimum.
- Can be used for viscous products up to 800 Cps / 3850 SSU.
- A wide range of accessories available to build metering units for your specific needs.

For more applications, info, and details, visit our web site or contact Us.

Technical data

Model		ZC17 12	ZC17 24	ZC17 48	ZC17 80	ZC17 150	ZC17 250	ZC17 330
Max. Flowrate	(m3/h /LPM/USGPM)	12/200/53	24/400/105	48/800/210	80/1333/360	150/2500/660	250/4166/1100	330/5500/1453
Min. Flowrate	(m3/h /LPM/USGPM)	1.2/20/5.3	2.4/40/10.5	4.8/80/21	8/133/36	15/250/66	25/416/110	33/550/145
Application		Multi-product metering						
Connections	Flanges ASA150	2"	2"	2"	3"	4"	6"	8"
	Flanges TW				TW1	TW3		
Materials	Manifold	Aluminum			Steel or Aluminum		Steel	
	Casing	Aluminum	Ductile iron or Ni resist iron					
	Front and back flanges	Nickel steel						
	Rotor	Aluminum						
	Blades	Graphite						
	Gaskets	Viton (option nitrile)						
Operating conditions	Pressure	0 to 10 bar / 0 to 150 PSI						
	Viscosity	Maxi : 800 mPa.s						
	Liquid temperature	-40°C (-40°F) to +60°C (+140°F)						
	Ambient temperature	-40°C (-40°F) to +60°C (+140°F)						
	Pressure drop	Max 0,5 bar						
Internal construction	Cyclic volume (litres/USG)	0,33/0.08	0,40/0.10	0,80/0.21	2,27/0.6	4,54/1.12	6,82/1.8	9.09/2.4
Metrological performance	Accuracy	<± 0,15% / Option <± 0,1% / For 10 : 1 measuring range						
	Repeatability	<± 0,02%						
Installation	Straight inlet and outlet sections	Not necessary						
Custody transfer approval		EC Evaluation Certificate N° LNE-11052						-

Dimensions (mm) and weight		ZC17 12	ZC17 24	ZC17 48	ZC17 80	ZC17 150	ZC17 250	ZC17 330
Distance between flanges (A)		180	180	180	356	432	400	400
Width (B)		290	290	290	356	432	400	400
Depth (C)	with mechan.register	220	220	246	365	492	620	746
	with pulser	186	186	266	272	399	526	653
Height (D)	with mechan.register	368	406	406	502	521	568	625
	with pulser	260	260	260	502	521	568	625
Weight (kg)		18	22	26	75	95	155	200
Flanges positions	(flanges ASA150)	PH1, PH2	PH1, PH2	PH1, PH2, PV1, PV2, PV3, PV4				PH1, PH2
	(flanges TW)	-	-	-	PV5 to PV10	PV5, PV6	-	-

Cargo Bunkering Flowmeters
SATAM SAS ZC17.80/ 150

ZC17.80/150

•SATAM SAS type ZC17/150 flowmeter with Veeder Root reset register and Veeder Root pulse transmitter signal to IAS
•Materials: House: Aluminium , Vanes: Carbon
•Dimensions: ND100 PN10/16
•Flow range: 15-150 m3/h
•Accuracy: +/- 0,2%
•Repeatability: +/- 0,025%
•Max Temperature: 120ºC
•Output signal: Pulse transmitter type Veeder Root
•Manifold: Distance between flanges: 425 mm
•Flow direction: Right to left / Left to Right

SATAM ZC17-SERIES POSITIVE DISPLACEMENT METERS

Industrial metering units for delivery or reception of petroleum products such as gasoline, diesel, domestic fuel oil, kerosene and more.

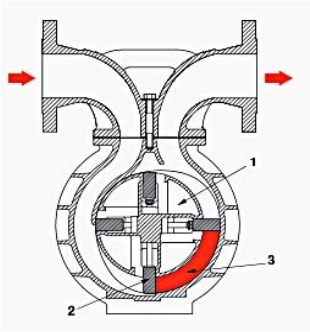

Benefits:

- Special design featuring an in-line manifold and a separate measuring chamber. This protects the measuring chamber from any eventual stress during installation.
- High accuracy over a wide range of flow rates.
- Very low repeatability error, less than 0.04%.
- Low head loss: 0.5 bar max, or 0.3 bar for the ZC17-24 and 48 models.
- Service and maintenance simplified by the use of many identical and interchangeable parts.
- Simplicity of design; the only moving parts being the two sets of blades and the rotor. This keeps maintenance costs to a minimum.
- Can be used for viscous products up to 800 Cps / 3850 SSU.
- A wide range of accessories available to build metering units for your specific needs.

For more applications, info, and details, visit our web site or contact Us.

Technical data

Model		ZC17 12	ZC17 24	ZC17 48	ZC17 80	ZC17 150	ZC17 250	ZC17 330
Max. Flowrate	(m3/h /LPM/USGPM)	12/200/53	24/400/105	48/800/210	80/1333/360	150/2500/660	250/4166/1100	330/5500/1453
Min. Flowrate	(m3/h /LPM/USGPM)	1.2/20/5.3	2.4/40/10.5	4.8/80/21	8/133/36	15/250/66	25/416/110	33/550/145
Application		Multi-product metering						
Connections	Flanges ASA150	2"	2"	2"	3"	4"	6"	8"
	Flanges TW				TW1	TW3		
Materials	Manifold	Aluminum			Steel or Aluminum		Steel	
	Casing	Aluminum	Ductile iron or Ni resist iron					
	Front and back flanges	Nickel steel						
	Rotor	Aluminum						
	Blades	Graphite						
	Gaskets	Viton (option nitrile)						
Operating conditions	Pressure	0 to 10 bar / 0 to 150 PSI						
	Viscosity	Maxi : 800 mPa.s						
	Liquid temperature	-40°C (-40°F) to +60°C (+140°F)						
	Ambient temperature	-40°C (-40°F) to +60°C (+140°F)						
	Pressure drop	Max 0,5 bar						
Internal construction	Cyclic volume (litres/USG)	0,33/0.08	0,40/0.10	0,80/0.21	2,27/0.6	4,54/1.12	6,82/1.8	9.09/2.4
Metrological performance	Accuracy	<± 0,15% / Option <± 0,1% / For 10 : 1 measuring range						
	Repeatability	<± 0,02%						
Installation	Straight inlet and outlet sections	Not necessary						
Custody transfer approval		EC Evaluation Certificate N° LNE-11052						-

Dimensions (mm) and weight		ZC17 12	ZC17 24	ZC17 48	ZC17 80	ZC17 150	ZC17 250	ZC17 330
Distance between flanges (A)		180	180	180	356	432	400	400
Width (B)		290	290	290	356	432	400	400
Depth (C)	with mechan.register	220	220	246	365	492	620	746
	with pulser	186	186	266	272	399	526	653
Height (D)	with mechan.register	368	406	406	502	521	568	625
	with pulser	260	260	260	502	521	568	625
Weight (kg)		18	22	26	75	95	155	200
Flanges positions	(flanges ASA150)	PH1, PH2	PH1, PH2	PH1, PH2, PV1, PV2, PV3, PV4				PH1, PH2
	(flanges TW)	-	-	-	PV5 to PV10	PV5, PV6	-	-

Cargo Bunkering Flowmeters
SATAM SAS ZC17.80/80

ZC17.80/80

•SATAM SAS type ZC17/80 flowmeter with Veeder Root reset register and Veeder Root pulse transmitter signal to IAS
•Materials: House: Aluminium , Vanes: Carbon
•Dimensions: ND80 PN10/16
•Flow range: 8-80 m3/h
•Accuracy: +/- 0,2%
•Repeatability: +/- 0,025%
•Max Temperature: 120ºC
•Manifold: Distance between flanges: 356 mm
•Output signal: Pulse transmitter type Veeder Root
•Flow direction: Right to left / Left to Right

SATAM ZC17-SERIES POSITIVE DISPLACEMENT METERS

Industrial metering units for delivery or reception of petroleum products such as gasoline, diesel, domestic fuel oil, kerosene and more.

Benefits:

- Special design featuring an in-line manifold and a separate measuring chamber. This protects the measuring chamber from any eventual stress during installation.
- High accuracy over a wide range of flow rates.
- Very low repeatability error, less than 0.04%.
- Low head loss: 0.5 bar max, or 0.3 bar for the ZC17-24 and 48 models.
- Service and maintenance simplified by the use of many identical and interchangeable parts.
- Simplicity of design; the only moving parts being the two sets of blades and the rotor. This keeps maintenance costs to a minimum.
- Can be used for viscous products up to 800 Cps / 3850 SSU.
- A wide range of accessories available to build metering units for your specific needs.

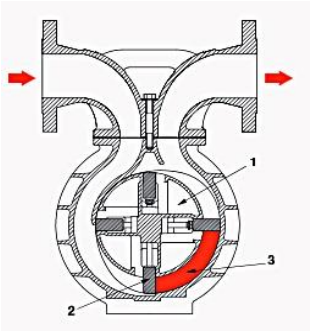

For more applications, info, and details, visit our web site or contact Us.

Technical data

Model		ZC17 12	ZC17 24	ZC17 48	ZC17 80	ZC17 150	ZC17 250	ZC17 330
Max. Flowrate	(m3/h /LPM/USGPM)	12/200/53	24/400/105	48/800/210	80/1333/360	150/2500/660	250/4166/1100	330/5500/1453
Min. Flowrate	(m3/h /LPM/USGPM)	1.2/20/5.3	2.4/40/10.5	4.8/80/21	8/133/36	15/250/66	25/416/110	33/550/145
Application		Multi-product metering						
Connections	Flanges ASA150	2"	2"	2"	3"	4"	6"	8"
	Flanges TW				TW1	TW3		
Materials	Manifold	Aluminum			Steel or Aluminum		Steel	
	Casing	Aluminum	Ductile iron or Ni resist iron					
	Front and back flanges	Nickel steel						
	Rotor	Aluminum						
	Blades	Graphite						
	Gaskets	Viton (option nitrile)						
Operating conditions	Pressure	0 to 10 bar / 0 to 150 PSI						
	Viscosity	Maxi : 800 mPa.s						
	Liquid temperature	-40°C (-40°F) to +60°C (+140°F)						
	Ambient temperature	-40°C (-40°F) to +60°C (+140°F)						
	Pressure drop	Max 0,5 bar						
Internal construction	Cyclic volume (litres/USG)	0,33/0.08	0,40/0.10	0,80/0.21	2,27/0.6	4,54/1.12	6,82/1.8	9.09/2.4
Metrological performance	Accuracy	<± 0,15% / Option <± 0,1% / For 10 : 1 measuring range						
	Repeatability	<± 0,02%						
Installation	Straight inlet and outlet sections	Not necessary						
Custody transfer approval		EC Evaluation Certificate N° LNE-11052						-
Dimensions (mm) and weight		**ZC17 12**	**ZC17 24**	**ZC17 48**	**ZC17 80**	**ZC17 150**	**ZC17 250**	**ZC17 330**
Distance between flanges (A)		180	180	180	356	432	400	400
Width (B)		290	290	290	356	432	400	400
Depth (C)	with mechan.register	220	220	246	365	492	620	746
	with pulser	186	186	266	272	399	526	653
Height (D)	with mechan.register	368	406	406	502	521	568	625
	with pulser	260	260	260	502	521	568	625
Weight (kg)		18	22	26	75	95	155	200
Flanges positions	(flanges ASA150)	PH1, PH2	PH1, PH2	PH1, PH2, PV1, PV2, PV3, PV4				PH1, PH2
	(flanges TW)	-	-	-	PV5 to PV10	PV5, PV6	-	-

Cargo Bunkering Flowmeters
SATAM SAS ZC17.24/48

ZC17.24/48

•SATAM SAS type ZC17/48 flowmeter with Veeder Root reset register and Veeder Root pulse transmitter signal to IAS
•Materials: House: Aluminium , Vanes: Carbon
•Dimensions: DN50
•Flow range: 4,8-48 m3/h
•Accuracy: +/- 0,2%
•Repeatability: +/- 0,025%
•Max Temperature: 80ºC
•Max Pressure: 8 Bar
•Output signal: Pulse transmitter type Veeder Root
•Flow direction: Right to left / Left to Right

SATAM ZC17-SERIES POSITIVE DISPLACEMENT METERS

Industrial metering units for delivery or reception of petroleum products such as gasoline, diesel, domestic fuel oil, kerosene and more.

Benefits:

- Special design featuring an in-line manifold and a separate measuring chamber. This protects the measuring chamber from any eventual stress during installation.
- High accuracy over a wide range of flow rates.
- Very low repeatability error, less than 0.04%.
- Low head loss: 0.5 bar max, or 0.3 bar for the ZC17-24 and 48 models.
- Service and maintenance simplified by the use of many identical and interchangeable parts.
- Simplicity of design; the only moving parts being the two sets of blades and the rotor. This keeps maintenance costs to a minimum.
- Can be used for viscous products up to 800 Cps / 3850 SSU.
- A wide range of accessories available to build metering units for your specific needs.

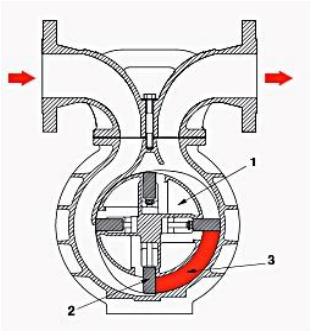

For more applications, info, and details, visit our web site or contact Us.

Technical data

Model		ZC17 12	ZC17 24	ZC17 48	ZC17 80	ZC17 150	ZC17 250	ZC17 330
Max. Flowrate	(m3/h /LPM/USGPM)	12/200/53	24/400/105	48/800/210	80/1333/360	150/2500/660	250/4166/1100	330/5500/1453
Min. Flowrate	(m3/h /LPM/USGPM)	1.2/20/5.3	2.4/40/10.5	4.8/80/21	8/133/36	15/250/66	25/416/110	33/550/145
Application		Multi-product metering						
Connections	Flanges ASA150	2"	2"	2"	3"	4"	6"	8"
	Flanges TW				TW1	TW3		
Materials	Manifold	Aluminum			Steel or Aluminum		Steel	
	Casing	Aluminum	Ductile iron or Ni resist iron					
	Front and back flanges	Nickel steel						
	Rotor	Aluminum						
	Blades	Graphite						
	Gaskets	Viton (option nitrile)						
Operating conditions	Pressure	0 to 10 bar / 0 to 150 PSI						
	Viscosity	Maxi : 800 mPa.s						
	Liquid temperature	-40°C (-40°F) to +60°C (+140°F)						
	Ambient temperature	-40°C (-40°F) to +60°C (+140°F)						
	Pressure drop	Max 0,5 bar						
Internal construction	Cyclic volume (litres/USG)	0,33/0.08	0,40/0.10	0,80/0.21	2,27/0.6	4,54/1.12	6,82/1.8	9.09/2.4
Metrological performance	Accuracy	<± 0,15% / Option <± 0,1% / For 10 : 1 measuring range						
	Repeatability	<± 0,02%						
Installation	Straight inlet and outlet sections	Not necessary						
Custody transfer approval		EC Evaluation Certificate N° LNE-11052						-

Dimensions (mm) and weight		ZC17 12	ZC17 24	ZC17 48	ZC17 80	ZC17 150	ZC17 250	ZC17 330
Distance between flanges (A)		180	180	180	356	432	400	400
Width (B)		290	290	290	356	432	400	400
Depth (C)	with mechan.register	220	220	246	365	492	620	746
	with pulser	186	186	266	272	399	526	653
Height (D)	with mechan.register	368	406	406	502	521	568	625
	with pulser	260	260	260	502	521	568	625
Weight (kg)		18	22	26	75	95	155	200
Flanges positions	(flanges ASA150)	PH1, PH2	PH1, PH2	PH1, PH2, PV1, PV2, PV3, PV4				PH1, PH2
	(flanges TW)	-	-	-	PV5 to PV10	PV5, PV6	-	-

Cargo Bunkering Flowmeters
SATAM SAS ZC17.24/24

SATAM ZC17-SERIES POSITIVE DISPLACEMENT METERS

Industrial metering units for delivery or reception of petroleum products such as gasoline, diesel, domestic fuel oil, kerosene and more.

- **Benefits:**
- Special design featuring an in-line manifold and a separate measuring chamber. This protects the measuring chamber from any eventual stress during installation.
- High accuracy over a wide range of flow rates.
- Very low repeatability error, less than 0.04%.
- Low head loss: 0.5 bar max, or 0.3 bar for the ZC17-24 and 48 models.
- Service and maintenance simplified by the use of many identical and interchangeable parts.
- Simplicity of design; the only moving parts being the two sets of blades and the rotor. This keeps maintenance costs to a minimum.
- Can be used for viscous products up to 800 Cps / 3850 SSU.
- A wide range of accessories available to build metering units for your specific needs.

ZC17/24:

•SATAM SAS type ZC17/24 flowmeter with Veeder Root reset register and Veeder Root pulse transmitter signal to IAS
•Materials: House: Aluminium , Vanes: Carbon
•Dimensions: DN50
•Flow range: 2,4-24 m3/h
•Accuracy: +/- 0,2%
•Repeatability: +/- 0,025%
•Max Temperature: 80ºC
•Max Pressure: 8 Bar
•Output signal: Pulse transmitter type Veeder Root
•Flow direction: Right to left / Left to Right

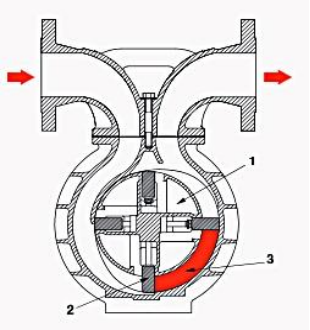

For more applications, info, and details, visit our web site or contact Us.

Cargo Bunkering Flowmeters
SATAM SAS ZC17.12/12

SATAM ZC17-SERIES POSITIVE DISPLACEMENT METERS

Industrial metering units for delivery or reception of petroleum products such as gasoline, diesel, domestic fuel oil, kerosene and more.

Benefits:
Special design featuring an in-line manifold and a separate measuring chamber. This protects the measuring chamber from any eventual stress during installation.
High accuracy over a wide range of flow rates.
Very low repeatability error, less than 0.04%.
Low head loss: 0.5 bar max, or 0.3 bar for the ZC17-24 and 48 models.
Service and maintenance simplified by the use of many identical and interchangeable parts.
Simplicity of design; the only moving parts being the two sets of blades and the rotor. This keeps maintenance costs to a minimum.
Can be used for viscous products up to 800 Cps / 3850 SSU.
A wide range of accessories available to build metering units for your specific needs.

ZC17/12:
•SATAM SAS type ZC17/12 flowmeter with Veeder Root reset register and Veeder Root pulse transmitter signal to IAS
•Materials: House: Aluminium , Vanes: Carbon
•Dimensions: DN50
•Flow range: 1,2-12 m3/h
•Accuracy: +/- 0,2%
•Repeatability: +/- 0,025%
•Max Temperature: 80ºC
•Max Pressure: 8 Bar
•Output signal: Pulse transmitter type Veeder Root
•Flow direction: Right to left / Left to Right

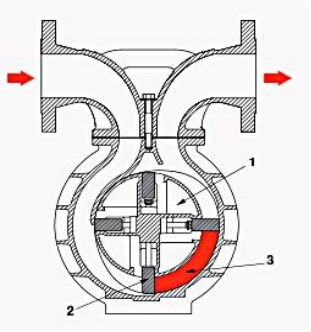

For more applications, info, and details, visit our web site or contact Us.

Cargo Bunkering Flowmeters
Micro Motion, F-Series

Application

Some marine fuel systems require fuel be recirculated throughout the system, meaning all of the fuel sent to the consumer is returned to the flow loop.

Fuel consumption rate can be defined as the amount of fuel used by a consumer (i.e. main engine, generator, boiler, etc.) per unit time. A consumer's FC rate is calculated by comparing the measured rate of fuel that enters the consumer (supply) to the rate of fuel that exits (return), seen below in Figure 1.

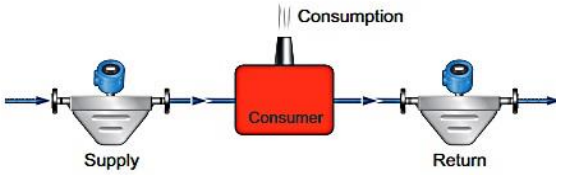

Figure 1. Using Two Coriolis Mass Flow Meters to Measure FC Rate

For more applications, info, and details, visit our web site or contact Us.

Micro Motion, F-Series Flow and Density Meters

Micro Motion F-Series meters deliver superb measurement with exceptional flow and density performance as well as outstanding reliability for use in critical process control environments.

High accuracy real world performance

•Best-in-class performance on liquid mass flow, volume flow, and density measurements in a compact design.
•Robust sensor design minimizes down time and process interruption costs.
•Rugged design minimizing process, mounting, and environmental effects.

Best fit-for-application

•Cleanable, self-draining design for critical process control service
•Compact design enables installation flexibility and reduced maintenance costs
•Broad range of I/O offerings including HART, Profibus-DP, FOUNDATION Fieldbus, 4–20 mA, and wireless capabilities.

Optimal flow and density fit for critical process applications

•High performance rugged measurement in a compact drainable design that maximizes process up time.
•Low frequency, high sensitivity fit-and-forget meter provides robust measurements even under demanding process conditions.
•Multiple line sizes provide an ideal platform for batching, distribution, allocation and intra-plant measurement applications.

Industry-leading capabilities that unleash your process potential

•Available with the most extensive offering of transmitter and mounting options for maximum compatibility with your system
•State of the art, ISO/IEC 17025 compliant calibration stands achieving ±0.014% uncertainty drive best in class measurement accuracy
•The most comprehensive communication protocol offering in the industry including Smart Wireless
•True multi-variable technology measures necessary flow and density process variables simultaneously

Micro Motion – 820 Electronics

820 electronics

The 820 electronics are targeted for fuel consumption applications including, but not limited to, main engines, auxiliary engines, boilers, among others.
Powerful functions such as security lockout switch, data log, and diagnostics follow stringent regulations and increase the measurement confidence under challenging process conditions.

Transmitter compatibility

Sensor model	Transmitter model or series					
	1500/2500	1700/2700	2200S	2400S	3000 series	FMT
All F-Series models	•	•	•	•	•	•

Flowmeter Fuel Consuption
OVAL FLOWPET-5G

(For water)

(For Oil)

OVAL FLOWPET-5G

FLOWPET-5G is an OVAL flowmeter primarily intended for use in boiler feed water and fuel oil metering applications. Field proven accuracy and long life along with the best price/performance and ease of use makes this industrial meter ideal as a dedicated tool for heat control.

Model

LS4976-530A
LS5076-530A
LS5276-530A
LS5376-530A
LS5576-530A
LS5676-530A

■ GENERAL SPECIFICATIONS

Item	Description		
LCD display	7-segment, 8-digit with 14mm characters, unit display, low battery alarm, and flow indicator (10-segment)		
Power source	Lithium battery or external power source • Lithium battery: 3.6V dedicated battery pack, Battery life: 8 years (varies with operating conditions), Storage life: 10 years • External power source: 12 to 50VDC±10% (Pulse output: Current capacity 10mA or more, Analog output: Current capacity 30mA or more		
Display item	Total flow, instantaneous flow rate ([/h] or [/min]), and resettable total flow		
Output signal (for model with a pulse generator)	Open collector, Allowable current: 20mA, Max. voltage applied: 30V		Analog output
	Factored pulse	Unfactored pulse	
	Pulse width: 1ms, 50ms, 100ms, 250ms	Pulse width: 2ms (fixed)	4 to 20mA
Temperature range	Fluid temperature: 0 to +120°C , Ambient temperature: -10 to +60°C		
Max. operating pressure	1.18MPa (Flange rating: JIS 10K RF)		
Accuracy	±0.5% of RD		

■ FLOW RANGE

● Flow Range for Oil Service

Model	Nominal Size mm	Flow Range, L/h			Pressure Loss (kPa) at Max. Flow Rate	
		Kerosene (Above 0.8mPa·s to 2mPa·s)	Gas Oil (heavy oil A) (Above 2mPa·s to 5mPa·s)	Heavy oil (Above 5mPa·s to 200mPa·s)	Kerosene 1.2mPa·s	Heavy oil 19mPa·s
LS4976-5□□ A/B	20	10 to 800	7 to 800	5 to 800	32	47
LS5076-5□□ A/B	20	150 to 1600	80 to 2000	50 to 2000	14	40
LS5276-5□□ A/B	25	300 to 3000	150 to 3800	80 to 3800	13	56
LS5376-5□□ A/B	40	600 to 5000	300 to 6400	150 to 6400	13	30
LS5576-5□□ A/B	40	1200 to 11000	600 to 14000	400 to 14000	25	54
LS5676-5□□ A/B	50	2000 to 20000	1400 to 24000	900 to 24000	27	55

For more applications, info, and details, visit our web site or contact Us.

Cargo Bunkering Flowmeters
MAG 5100W – MAG5000

SITRANS F M MAGFLO electromagnetic flowmeters offer reliable, precise and

inexpensive flow measurement on all electrically conductive liquids. Typical applications are found in all industries. E.g.:

• Water sector: Potable water, treatment of chemicals, waste water and sludge.
• Food sector: Dairy products, beer, wine, soft-drinks and fruit juices.
• Chemical sector: Detergents, pharmaceuticals, acids and alkalies.
• Other sectors: District heating, paper pulp and mining slurries.

SITRANS F M MAGFLO electromagnetic flowmeters are characterised by simplicity:

⇒ Simple to install
⇒ Simple to commission
⇒ Simple to operate
⇒ Simple to maintain

All **SITRANS F M MAGFLO** electromagnetic flowmeters feature a unique SENSORPROM
memory unit which stores sensor calibration data and signal converter settings for the lifetime of
the product.
At commissioning the flowmeter commences measurement without any initial programming.

SITRANS F M MAG 5000

Details

Accuracy	0.4 % ±1 mm/s
Input / output	1 current output 1 digital output 1 relay output
Communication	HART
Display	Background illumination with alphanumeric text, 3 x 20 characters
Enclosure	IP67 (NEMA 4x/6) IP20 (NEMA 2)
Power supply	12-24 V a.c./d.c. 115-230 V a.c.
Ambient temperature	From -20 to 50 °C (-4 to 122 °F)
Approvals	MI-001 Danak PTB OIML R49
Ex-approvals	FM/CSA Class 1, Div 2

For more applications, info, and details, visit our web site or contact Us.

Badger Meter
RCDL DISC

Electronic register type LCR with LCD display, for RCDL series M25, M70, M120 and M170.

LCR Register

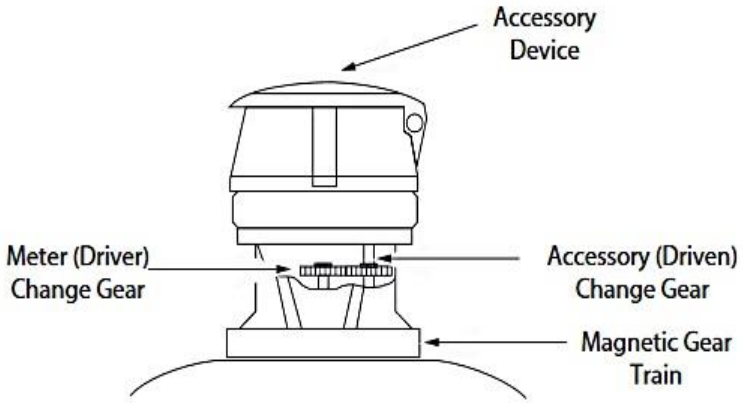

BADGER METER RCDL DISC METERS
POSITIVE DISPLACEMENT – NUTATING DISC

The RCDL Disc Meter combines the accuracy of positive displacement design with the reliability and economy of nutating disc technology. Well suited for measuring the flow of water and other fluids, hot or *cold, this meter can be* combined with most Badger mechanical and electronic accessories for applications from batching to inventory control.

Applications:

Inventory and process control of cold and hot water, oils, fuels, alcohol's, HVAC, condensate return, boiler feed, additive dispensing, and fuel consumption.

For more applications, info, and details, visit our web site or contact Us.

- **Features**
- Accuracy: ±1.5% over full range
- Repeatability: ±0.5%
- Flow range ranges from 0.5 to 25gpm to 2 to 170gpm
- Rugged bronze or thermoplastic housing
- Maximum Operating Temperature
  - Plastic Housing: 100°F
  - Bronze Housing: 120°F
  - High temperature option: 250°F
- Maximum Operating Pressure: 150 PSI
- Easily maintained without removing from line
- Durable components for minimal maintenance
- Wide range of compatible accessories

Dimensions In Inches without Register						Flow Rate In Gallons		
Meter Model	Meter Size	Housing Material	A Meter Length	B Centerline to Base	Meter Length with Conn.	Cold Liquids 32...120° F	Chemicals & Oils 32...250° F (BZ) 32...100° F (PL)	Approx. Weight
M25	5/8"	BZ or PL	7-1/2"	1-3/8"	12-7/16"	1/2...25 gpm	1...25 gpm	5 lb
M25	3/4"	BZ or PL	7-1/2"	1-3/8"	12-5/8"	1/2... 30 gpm	1...30 gpm	5 lb
M35	3/4"	BZ	9"	1-3/4"	14-1/8"	3/4... 35 gpm	N/A	6 lb
M40	1"	PL	10-3/4"	2-1/4"	16-3/16"	3/4... 50 gpm	N/A	5 lb
M70	1"	BZ	10-3/4"	2-1/4"	16-5/8"	1...70 gpm	5...70 gpm	12 lb
M120	1-1/2"	BZ	12-5/8"	2-5/8"	19-3/4"	2...120 gpm	*See **Note**	20 lb
M170	2"	BZ	15-1/4"	3-3/8"	22-7/8"	2...170 gpm	N/A	30 lb

BZ = Bronze; PL = Plastic
NPT connection set assemblies available.

N/A = Not available in high temperature/chemical option.
***Note**: Available for chemicals or fluids not to exceed 110° F (43° C)

Model M25

Dimension: 1 – ½" NPT
- Materials: House in bronze
- Temperature: Maximum 50ºdegree C.
- Flow Range: 2,28 to 29,1 m3/hour
- Accuracy: +/- 1.5 % RD
- Pressure rating: 10 bar.

Model M170
- Dimension: 2" NPT
- Materials: House in bronze
- Temperature: Maximum 50ºdegree C.
- Flow range l/min (PPO): 8 – 643
- Accuracy: +/- 1.5 % RD
- Pressure rating: 10 bar.

Model M120
- Dimension: R 1 "
- Materials: House in bronze
- Temperature: Maximum 50ºdegree C.
- Flow Range: 0,180 to 5,0 m3/hour
- Accuracy: +/- 1.5 % RD
- Pressure rating: 10 bar.

Model M70
- Dimension: R 1 1/4"
- Materials: House in bronze
- Temperature: Maximum 50ºdegree C.
- Flow Range: 0,24 to 15,9 m3/hour
- Accuracy: +/- 1.5 % RD
- Pressure rating: 10 bar.

Features

- Tailored to suit volumetric flowmeters
- Programmable for either frequency or analog flow input
- Uses a live or fixed density value for volume to mass calculations
- Versatile "user value" available on main menu
- Selection of Detail or Basic main menu to suit operator and application
- Selection of second language and user tags
- RTC logging with over 1000 entries.
- Programmable pulse width and scaling of pulse output
- 4-20mA retransmission
- RS232 and RS485 or Ethernet (optional) serial ports
- Modbus RTU, Printer and other serial port protocols
- Front panel adjustment of 8-24V DC output voltage
- Backlit display

CE

Overview

The 515 FC01 application pack is a rate totaliser for the measurement of a fluid using the frequency or analog volumetric flow signal output from a wide range of flowmeters.

The flow computer can calculate and display the flow rate, resettable total and the accumulated total for volume and mass, using a live or fixed density for the conversion.

The frequency input is compatible with a wide range of frequency signals, including millivolt signals, reed switches, Namur proximity switches and pulse trains via its smart front-panel program selection. The analog input can be scaled and have filtering, square law, non-linear correction and cutoff points applied to the signal.

A freely programmable "user value" on the main menu can serve as a setpoint for the 4-20mA output or as an operator identifier to be logged.

Calculations

For the frequency input the calculation of *volume* total is exact as the instrument collects all pulses detected on the input.

volume total = pulses / k-factor

The flow rates are derived from an accurately measured frequency:

volume flow = frequency / k-factor

For the analog input, to derive the flow rate, the analog signal is normalised to a value (A) between 0 and 1.

$$volume\ flow = (V_f max - V_f min)A + V_f min$$

$$total = \int (flow \cdot \Delta t)$$

Density is used to calculate the mass flow and total:

mass = volume x density

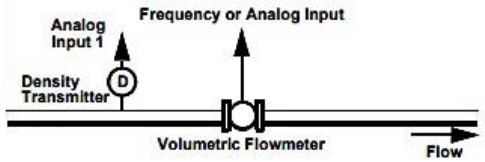

Model 515

Application FC01

Single Channel
Flow Computer

for Volumetric Frequency
or Analog Flowmeters

515-FC01-AP-V2.pdf

For more applications, info, and details, visit our web site or contact Us.

Contrec Model 103

Features:

- Pulse Output
- High and Low Flow Rate Alarms
- Fully Programmable
- Displays Rate, Total and Accumulated Total
- DC Powered
- Panel, Wall and Pipe Mounting
- Watertight to IP67 (Nema 4X)
- CE Compliant

Field Mounting Rate Totaliser

PROVEN IN THOUSANDS OF FIELD INSTALLATIONS THROUGHOUT THE WORLD.

The 103D is a high accuracy Rate Totaliser designed to operate with digital output flowmeters. Having an IP67 weatherproof case, tactile keyboard and various mounting options, makes it a very versatile unit.

The 103D is powered from a 9-28 Volts DC supply. For installation in hazardous areas a certified intrinsically safe version is available (please see Model 202D).

The DC powered version will operate from an external power source between 9 and 28 Volts and draws no more than 4mA. This enables the 103D to be powered from AC mains adaptors and eliminates the need to run mains voltages in the field.

Lithium batteries provide totaliser and programming retention if the DC power supply is interrupted.

The 103D Rate Totaliser is housed in a rugged, yet attractive, IP67 (Nema 4X) polycarbonate enclosure which is completely watertight. A wall mounting bracket (no gland holes) is supplied as standard, while panel and pipe mounting brackets are available as options.

DIMENSIONS

Overall Sizes

151mm (5.9") width
98mm (3.9") height
43mm (1.3") depth

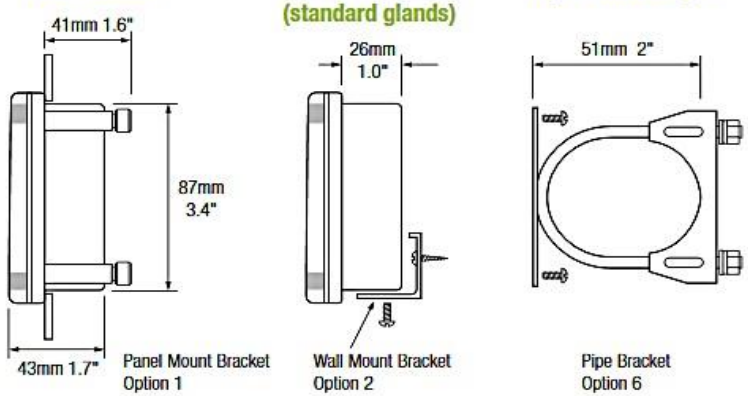

TERMINAL DESCRIPTIONS

Terminal Inputs & Outputs	
Number	
1	DC Power 0 Volts
2	DC Power 9-28 Vdc
3	Low Alarm (–)
4	Low Alarm (+)
5	High Alarm (–) or Pulse (–)
6	High Alarm (+) or Pulse (+)
7	Signal Input (–)
8	Signal Input (+)

PRODUCT CODES

Product Code & Mounting Types		
103D	•	**Rate Totaliser**
Enclosure Mounting	**0**	Wall Mounting (no gland holes)
	1	Panel Mount Brackets
	2	Wall Mounting (standard glands)
	6	Pipe Mount Adapter

Typical Part Number: 103D .2

For more applications, info, and details, visit our web site or contact Us.

Flow Computer/Rate Totalizer

Contrec Model 202

Features:
- ATEX, CSA US/C approved
- Displays Rate, Total and Accumulated Total
- Battery, Loop or DC Powered
- Instrinsically Safe
- Watertight to IP67 (Nema 4X)
- Wall, Pipe, Panel or Flow Meter Mounting
- Fully Programmable
- 4-20mA Output
- High and Low Alarms
- CE Compliant

TERMINAL DESCRIPTIONS

Common to all Models	
Number	
7	Signal Input (–)
8	Signal Input (+)

DC Power Versions	
Number	
1	DC Power 0 Volts
2	DC Power +9 to 28Vdc

4-20mA Output Versions	
Number	
1	4-20mA (–)
2	4-20mA (+)
3	Low Alarm (–)
4	Low Alarm (+)
5	High Alarm (–) or Pulse (–)
6	High Alarm (+) or Pulse (+)

DIMENSIONS

Enclosure Dimensions

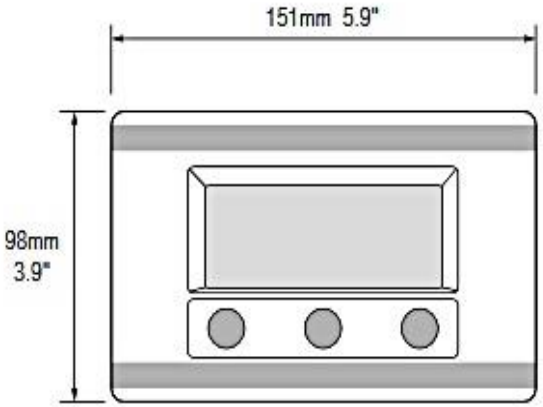

Panel Mount

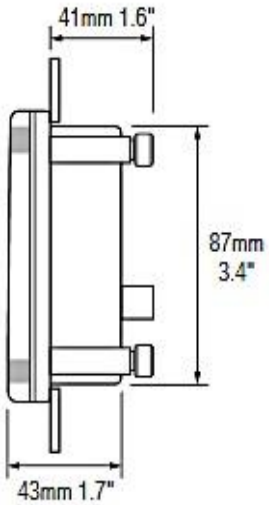

Panel Mount Brackets
Option 1
(cutout size 87mm 3.4" H
x 141mm 5.6" W)

Wall Mount

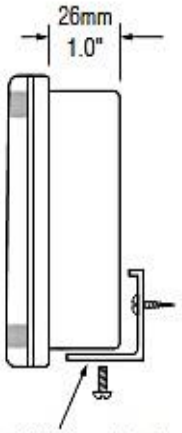

Wall Mount Bracket
Options 0 & 2

Pipe Mount Adapter

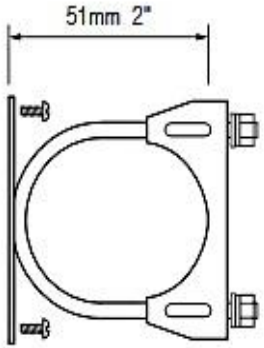

Pipe Bracket
Option 6

For more applications, info, and details, visit our web site or contact Us.

DAMCOS
Actuators, Hydraulic Valve Control Systems

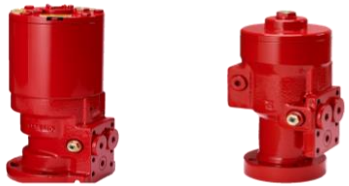

BRC – Hydraulic double-acting balanced rotary actuator 90° quarter-turn

Due to its proven reliability, the Damcos Valve Remote Control (VRC) system sets the standard for the marine industry, and we offer both a hydraulic and an electro-hydraulic version. Both are complete one-step solutions that reflect a deep appreciation of marine customer needs and industry standards.

The systems are built on a cost-effective modular design that allows a high degree of customization while delivering performance on all fronts.

Hydraulic VRC

- Compact, yet high-torque output.
- Weight and space saving.
- Prepared for direct built-on modular control function.
- Patented multi-helical spline.
- Easy adaption and mounting on all quarter-turn and linear valves; adjustments without demounting – minimum oil volume and pipe dimension.
- Built-on portable hand pump.
- Hydraulic and electrical position indicators.
- Customized Control Units and System Power Unit.

Electro-hydraulic VRC

- Designed to be mounted directly on Damcos valve actuator.
- Power or P-NET bus controlled.
- Automatic functions and supervision.
- No piping needed.
- No System Power Unit or Solenoid Valve Cabinet needed.

For more applications, info, and details, visit our web site or contact Us.

Damcos actuators can be fitted in any possible location. The standard control block is designed for mounting on or close to the actuators. The blocks offer various combination possibilities, e.g., flush system, filter, relieve valve, etc.

Damcos actuators series overview

	Torque							
BRC	125 Nm							16000 Nm
	125	250	500	1000	2000	4000	8000	16000
	Break-away opening torque							
BRCF	88 Nm							9600 Nm
	125	250	500	1000	2000	4000	8000	16000
	End closing torque							
BRCF	30 Nm							4800 Nm
	125	250	500	1000	2000	4000	8000	16000
	Closing thrust							
KC	17000 N							92500 N
	65		125				250	
	End thrust							
KF/KFR	1500 N							16500 N
	65		125				250	

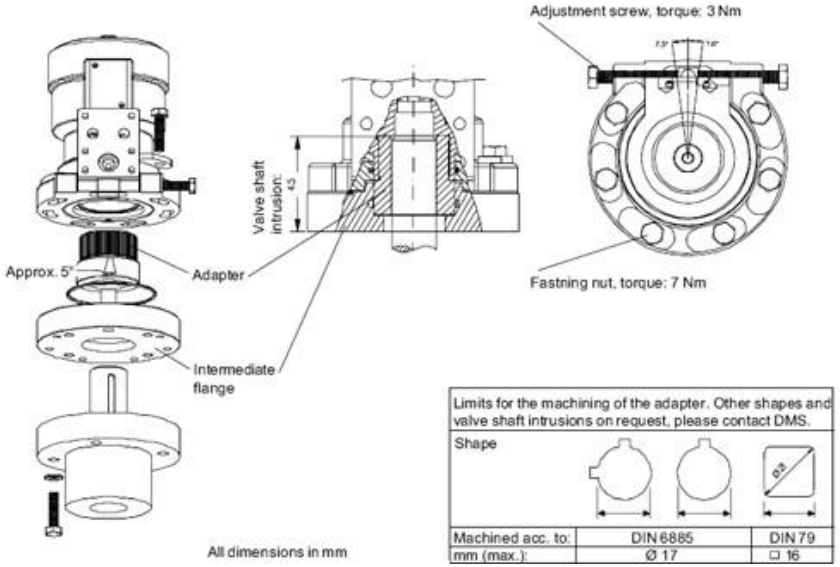

PD / PSP
Pneumatic Actuators

PNEUMATIC ACTUATOR, MANUAL HANDWHEEL

Applicable for both DA (Double-Acting) & SR (Spring-Return) actuators
sizes PDS 50 through PDS 200
•Simple Design & Compact Size
•Lightweight
•The free top shaft for accessories such as ITS
•No levers or bars required for manual operation – Safety Enhanced
•No sandwich type declutch gear boxes
•May be used as adjustable travel stop in either direction at any position
•Actuator may be locked in open or closed position

Model

PD 45/PS 45
PD 50/PS 50
PD 55/PS 55
PD 70/PS 70
PD 75/PS 75
PD 85/PS 85
PD 100/PS 100
PD 125/PS 125
PD 160/PS 160
PD 200/PS 200

For more applications, info, and details, visit our web site or contact Us.

Pneumatic Actuators
DA/SR

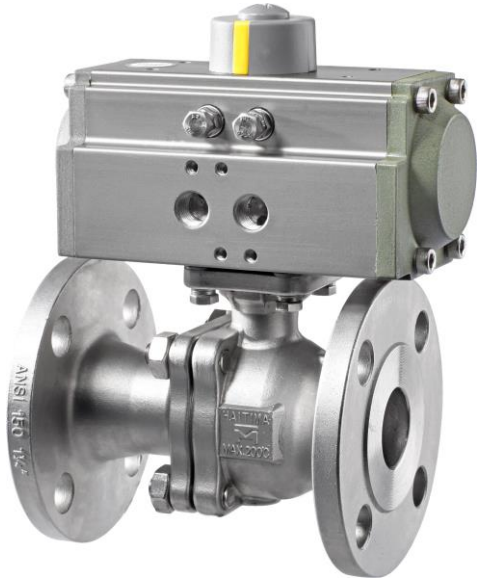

Operation and Construction

Haitima actuators are delivered as double acting (DA) as well as single acting (SR) types.
The return springs on SR type are mounted inside the actuator, and the overall size is equal for both types.
The mounting between valve and actuator is acc. to ISO 5211, and it is Namur connection for solenoid
valves / limit switch boxes.

Range of applications

The actuator is designed for operating of quarter turn valves i.e ball and butterfly valves.

Technical specification

Temperature area: -20 °C to +80 °C
Max working pressure: 10 bar
Operating supply: Clean air
Installation area: Indoor and outdoor

Materials:

Body: Extruded aluminium
Piston: Aluminium
End pieces: Aluminium
Stem: Nickelplated Carbon Steel
Piston gaskets: Nylon 46
Spring (SR): Special steel

Model:	Moment nm:	Mounting Flange:	Square top:
HTD-052	25	F03/F05	11mm
HTD-063	44	F05/F07	14mm
HTD-083	89	F05/F07	17mm
HTD-092	136	F05/F07	17mm
HTD-105	203	F07/F10	22mm
HTD-125	349	F07/F10	22mm
HTD-140	526	F10/F12	27mm
HTD-160	802	F10/F12	27mm
HTD-190	1292	F14	36mm
HTD-210	1776	F14	36mm
HTD-240	2785	F16	46mm
HTD-270	3916	F16	46mm

The operating principle of double acting actuator
CCW-counter-clockwise

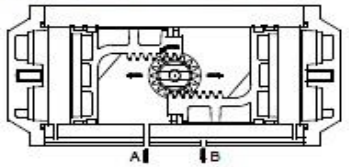

Air to port A forces the pistons outwards, causing the
piston to turn counter-clockwise while air is being
exhausted from port B.

For more applications, info, and details, visit our web site or contact Us.

Stainless steel Actuators
DA/SR

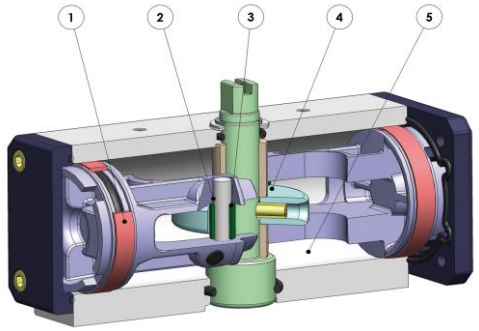

Technical features:
•Torque from 15Nm to 480 Nm.
•Mounting flange according to DIN/ISO 5211 DIN 3337
F03 – F05 – F07 – F10
VDI/VDE 3845 connection for accessories
•Rotation angle 90°
•Torque: directly proportional to the air supply
Working condition:
•Temperature from -20° C to +80° C
•Air supply: 5,6 bar; maximum 8,4 bar
•Operating media: compressed filtered air, not necessarily lubricated In case of lubricated air, either non detergent oil or NBR compatible oil, must be used.

FEATURES AND BENEFITS		
1	Energized and self-lubricated strips	Less friction between piston and cylinder
		It prevents the bonding of the seal to the cylinder even after long periods of inactivity
2	Slots, bushes and pins made by steel with hardness higher than 50 HRC	Higher resistance to the forces inside the actuator
3	Rolling friction between piston and slot	Less friction
4	Scotch yoke with rolling friction (transforming rotary motion into linear motion using piston and shaft without teeths/gears)	Reduced friction between piston and shaft with consequently less wear on the relevant parts
		Empowered Break Away Torque (BTO & BTC)
		Smaller volume/size than rack and pinion actuators (with the same torque) therefore less space required for installation
		Less weight than the rack and pinion (-30% kg / Nm), with consequent savings on the construction sizing of the plant/equipment
		Lower air consumption compared to the rack and pinion (-40% air cm3/Nm for Double Acting and -20% air cm3/Nm for Spring Return) therefore less load on the compressor or the possibility of using a smaller compressor's size.
5	Rolled cylinder	Less wear of the energized ties thanks to the low roughness of the surface (0.15 micron Ra)
	100% in- house manufacturing process technology	Maximum control and accuracy in all the stages of the manufacturing process
	ATEX Certificate	Installation is allowed in a potential explosive environment
	SIL 3 Certified	Guarantee of the high level of functional safety.

For more applications, info, and details, visit our web site or contact Us.

Adapters, Mounting Brackets & Square Reducers
For Actuators

Mounting Brackets

Mounting Brackets:

Mounting brackets, also called consoles or lanterns are used for the construction of pneumatic or electric actuators on valves .

They are especially needed if the drive can not be mounted directly on the valve .

Our mounting kits they get by default made of galvanized steel or stainless steel. Our special processing of bridges guaranteed flat surfaces according to standard .

In addition, all interfaces are standardized and harmonize with fittings according, to ISO5211 - DIN3337 and actuators according to VDI / VDE 3845th.

Square Reducers

Square Reducer for actuators.

Type:
RHE 11-9mm
RHE 14-11mm
RHE 17-14mm
RHE 22-17mm
RHE 27-22mm
RHE 36-27mm

Adapters

Adapters:

Adapter, also called couplers or carriers, used for the positive connection of the actuator and valve when mounting bridge is used . The adapter transmits the rotational movement of the actuator to the valve .

Adapters

Adapters:

Our adapter blanks are made of stainless steel, which is well suited for machining . They are the driving side finish machined with a square according to ISO 5211th We offer fittings sided machining to suit your needs .

For more applications, info, and details, visit our web site or contact Us.

Limit switch boxes
standard & EX applications

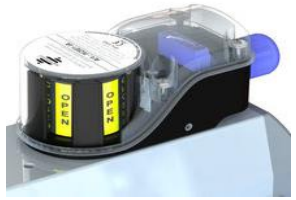

limit switch boxes i-box Ex ia

' limit switch boxes 'big-box

limit switch boxes 'i-box'

limit switch boxes 'EUROBOX'

Limit Switch boxes 'Flex box' Atex Ex de, t Aluminium

Limit Switch boxes 'Flex box' Ex e ia Aluminium

Limit Switch boxes 'Flex box' Ex ia Aluminium

Limit switch boxes Neptun EX de, t Stainless steel

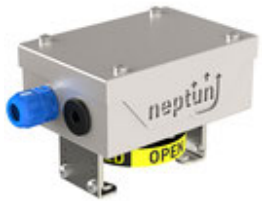

Limit switch boxes Neptun EX ia Stainless steel

'limit switch boxes 'neptun

limit switch boxes 'wave

limit switch boxes wave Ex ia Vestamid

limit switch boxes wave Ex de, t, nA Vestamid

For more applications, info, and details, visit our web site or contact Us.

Standard Applications
EPPI2M01-3D
EPPI2M01-AM5
EPPI2M01-AM6

Options

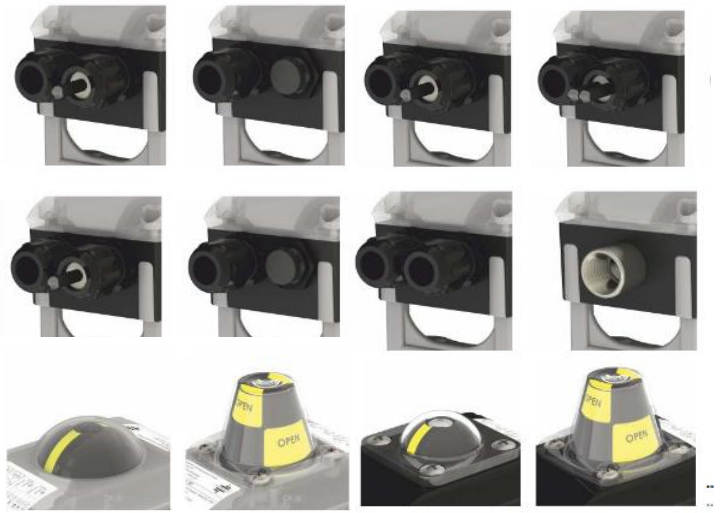

Housing EPP
Housing: Polyamide black
Cover: Polycarbonate transparent
Bracket: Plastic with 30% fiber glass
-Visual indicator 2D (Optional: 3D or 3D1)
- Adjustable polyamide mounting bracket (PA6)
reinforced with 30% fiber glass or
simple assembly on actuators according to VDI/VDE 3845

Housing EPE
Housing: Polyamide black
Cover: Polycarbonate transparent
Bracket: Stainless steel AISI 304

Housing EAE
Housing + cover: Aluminum black
Visual panel: Polycarbonate clear
Shaft: St. st. AISI 303
Bracket: St. st. AISI 304
Protection by enclosure: IP66/IP67/IP68

Housing EAE-40° / EAE-55°
Housing + cover: Aluminum black
Visual panel: none
Shaft: St. steel AISI 303
Bracket: St. steel AISI 304
Protection by enclosure: IP66/IP67/IP68
Special cable gland and sealings for low temperatures

For more applications, info, and details, visit our web site or contact Us.

Housing: EVP-IA
Housing: Vestamid black
Cover: Vestamid with visual panel
Bracket: Plastic with 30% fiber glass

Wave box with mechanical Ex d switches, 2-wire N. O. 24V DC
Technical features:

•Producer switch: Bartec
•Switch type: 07-1511-1520
•Function: 2-wire N.O.
•Contacts: Silver
•Voltage: 24V DC
•Maximum current: 4A
•Ambient temperature: -20°C … +40°C
•ATEX: EX II 2G Ex de IIC T6 Gb
EX II 2D Ex t IIIC T80°C Db
•CE Type examination certificate: IBExU 12 ATEX 1022 X
•Ex zone: Zone 1, Zone 21

Housing: EVE-IA
Housing: Vestamid black
Cover: Vestamid with visual panel
Bracket: Stainless steel AISI 304

Housing: EAE-IA
Housing + cover: Aluminum black
Visual panel: Polycarbonate
Shaft: St. steel AISI 303
Bracket: St. steel AISI 304
Protection by enclosure: IP66/IP67/IP68

Housing: EAE-IA-40° / EAE-IA-55°
Housing + cover: Aluminum black
Visual panel: none
Shaft: Stainless steel
Bracket: St. steel AISI 304
Protection by enclosure: IP66/IP67/IP68
Special cable gland and sealings for low temperatures

Options

For more applications, info, and details,
visit our web site or contact Us.

www.aminstrumentering.com
kontor@aminst.no
+47 70 17 69 69

limit switch box for direct mounting
Standard Applications & hazardous areas Ex ia

I-Box 2D EX

I-Box 2D
Sstandard applications

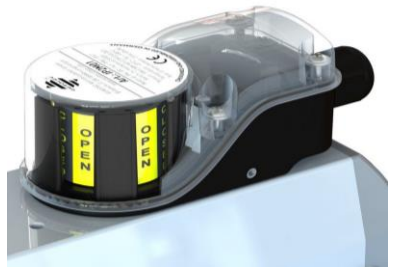

Housing colour

Visual indicators

Mounting kit

Description

- Very compact limit switch box in conductive vestamide
- Transparent polycarbonate cover with integrated large OPEN-COSEDindicator
Optional 2D indicator for L- or T-positions)
Direct mounting without mounting bracket on actuators according to VDI/VDE 3845
Hole spacing: 80 x 30mm (optional: 130x30mm, 50x25mm - with IMBHV bracket)
Shaft heights: 20 or 30mm (optional: 40 and 50mm - with IMBHV bracket)
- New, easy and time-saving fastening system
- Enclosure IP66 + IP67 according to DIN EN 60529
- Cable gland M20x1,5 blue (for cable Ø 6-12mm)
Sealings TPE and NBR, Screws AIS I 304, Stainless steel shaft AISI 303
- Application: Explosive atmospheres of zone 1 and 21 (Ex ia)
1-2 mechanical switches
1-2 proximity sensors in V3 design

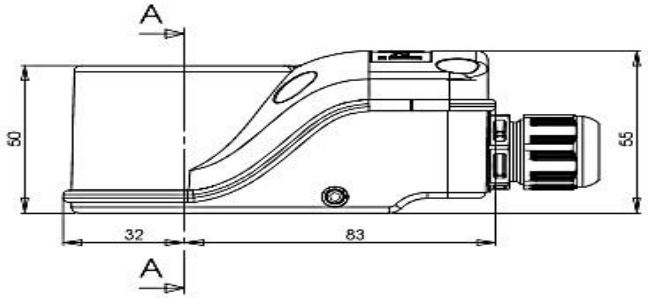

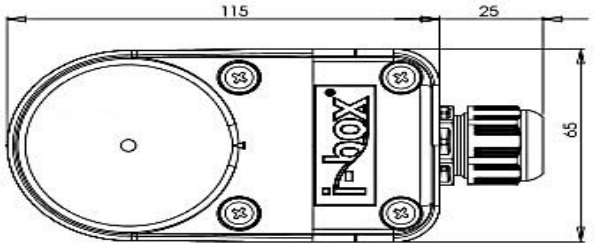

SCHNITT A-A

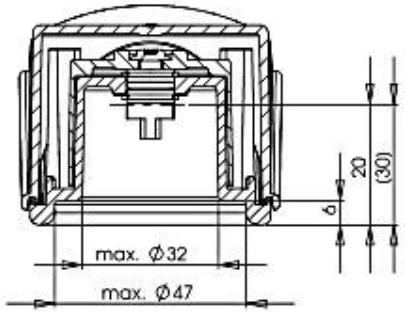

Mounting kit description

This mounting kit helps you to add a position feedback in form of a limit switch box o your manual valve. You can mount any limit switch box that provides a F05 interface from below.
The assembly steps are described in detail in the related operating manual
The mounting kit includes the following parts:
- Upper part (AISI 304) with F05 flange and hole
  spacing 80x30mm for i-box
- Bottom part (AISI 304) matching the top flange of the valve
- Drive screw, stainless steel AISI 303
- Lock nut (AISI 304) for vertical adjustment

For more applications, info, and details, visit our web site or contact Us.

Flex box with mechanical Ex d switches, SPDT, NO./NC.

Technical features:
Producer switch: Bartec
Switch type: 07-1511-1030
Function: N.O. / N.C.
Voltage, Current consumption:
DC: 24V, 150mA
AC: 250V, 4A
SIL Level: SIL 1-3 (IEC 61508:2010)
Ambient temperature:
T6/T80°C: -20°C … +40°C
T5/T95°C: -20°C … +60°C
ATEX/IECEx:
EX II 2G Ex de IIC T5-T6 Gb
EX II 2D Ex t IIIC T80°C-T95°C Db
CE Type examination certificate:
EPS 16 ATEX 1012 X
IECEx EPS 16.0006 X
Ex zone: Zone 1, Zone 21

For more applications, info, and details, visit our web site or contact Us.

Housing EFE-IA

Housing: Aluminium
OPEN-CLOSED indicator below the box
Bracket: Stainless steel (AISI 304)
IP66/IP67
T6/T80°C: -25°C...+70°C
T5/T95°C: -25°C...+80°C
T4/T135°C: -25°C...+100°C

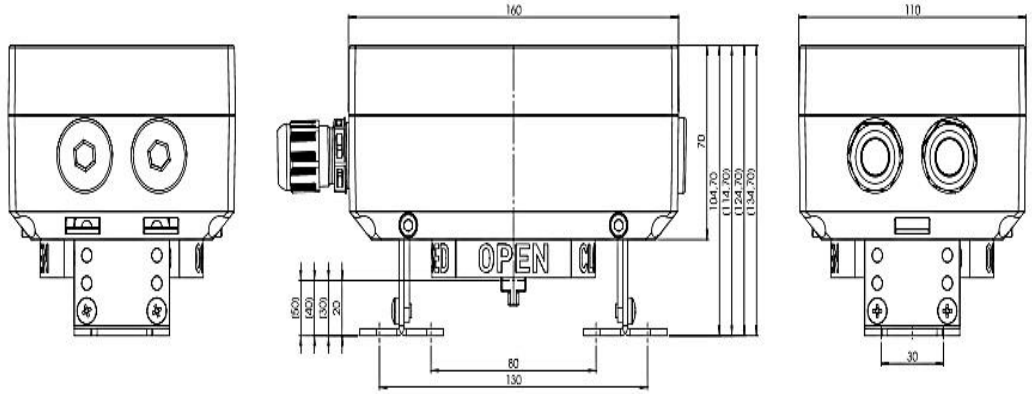

Housing EFE-EIA

Housing: Aluminium
OPEN-CLOSED indicator below the box
Bracket: Stainless steel (AISI 304)
IP66/IP67
T6/T80°C: -25°C...+40°C
T5/T95°C: -25°C...+60°C
T4/T135°C: -25°C...+75°C

Options

Housing EFE-ED

Housing: Aluminium
OPEN-CLOSED indicator below the box
Bracket: Stainless steel (AISI 304)
IP66/IP67
T6/T80°C: -25°C...+40°C
T5/T95°C: -25°C...+60°C
T4/T135°C: -25°C...+75°C

Solenoid Valves

Monostable/ Bistable Standard & EX Applications

MNI52024DC

PNF532

MNF32024DC-40°C

MNF532024DC

MNF52024DC-316L

MNF532024DC-DM

MNF52024DC-IA-40°C

MNI52024DC-NA

MNF532024DC-NA

VB52024DC-4

MNI-M

MNF532-M

MNI52024DC-DM

For more applications, info, and details, visit our web site or contact Us.

Solenoid Valves
Standard Applications

MNF52024DC

Version: Monostable
Function: 5/2- and 3/2-way, comb
Ports: G1/4" (G1/2" on request)
Voltages: 24V DC, 230V AC
(more voltages on request)
Material: Al, PA6, Ms, NBR
Temperature: 10°C...+50°C
SIL: SIL 1-3 (IEC 61508:2010)

MNI52024DC

Version: Bistable
Function: 5/2- or 5/3-way
Ports: G1/4" (G1/2" on request)
Voltages: 24V DC, 230V AC
(more voltages on request)
Material: Al, PA6, Ms, NBR
Temperature: -10°C...+50°C

VB52024DC-4

Version: Monostable
Function: 5/2- way
Ports: G1/4"
Voltages: 24V DC, 230V AC
(more voltages on request)
Material: Al, 6 NBR,
Temperature -20°C...+70°C

PNF532

Version: Monostable
Function: 5/2- and 3/2-way comb.
Ports: G1/4"
Material: Al, Ms,PA6 NBR,
Temperature: -10°C...+70°C

Coils

Standard coil without plug connector

Voltages:
24VDC, 230V AC
(more voltages on request)
Power:
DC=3W / AC=5VA

Silencers

Flow reducers

Connectors

Standard connector industy form B for coil ES...
with cable gland M16x1,5 for cable
Ø 5-6mm

LED connector industry form B with
varistor against voltage peaks

Voltages:
DC: 24V
AC: 115V, 230V

M12 connector industry form B for quick connection

For more applications, info, and details, visit our web site or contact Us.

Solenoid valves
for hazardous areas Ex

MNF532024DC-NA

Version: Monostable
Function: 5/2- and 3/2-way, comb.
Ports: G1/4" (G1/2" on request)
ATEX/Zone Zone 2+22,
II 3G Ex nA IIC T5 Gc
II 3D Ex tc IIIC T95°C Dc IP65

Voltages: 24V DC, 230V AC
(more voltages on request)
Al, PA6, Ms, NBR
-10°C...+50°C
SIL 1-3 (IEC 61508:2010)

Material: Al, PA6, Ms, NBR
Temperature: -10°C...+50°C
SIL: SIL 1-3 (IEC 61508:2010

MNI52024DC-NA

Version: Bistable
Function: 5/2- or 5/3-way
Ports: G1/4"
ATEX/Zone Zone 2+22,
II 3G Ex nA IIC T5 Gc
II 3D Ex tc IIIC T95°C Dc IP65

Voltages: 24V DC, 230V AC
(more voltages on request)
Al, PA6, Ms, NBR
Material: -10°C...+50°C
Temperature

MNF52024DC-IA-40°C

Version: Monostable
Function: 5/2- or 3/2-way
Ports: G1/4"
ATEX/Zone Zone 1+21,
II 2G Ex ia IIC/IIB T6 Ga
II 2D Ex t IIIC T80°C Db IP65

Voltages: 24V DC
Material: Al, PA6, Ms, NBR
Temperature -40°C...+50°C
SIL: SIL 1-3 (IEC 61508:2010)

MNF52024DC-316L-IA

Version: Monostable
Function: 5/2- or 3/2-way
Ports: G1/4"
ATEX/Zone Zone 1+21,
II 2G Ex ia IIC/IIB T6 Ga
II 2D Ex t IIIC T80°C Db IP65

Voltages: 24V DC (max. 28V)
Material: Stainless steel, PA6, NBR
Temperature -10°C...+50°C
SIL: SIL 1-3 (IEC 61508:2010)

MNF532024DC-DM

Version: Monostable
Function: 5/2- or 3/2-way, comb
Ports: G1/4"
ATEX/Zone Zone 1+21,
II 2G Ex dm mb IIC T5 Gb X
II 2D Ex tb IIIC T95°C IP66 Db X

Voltages: 24V DC, 230V AC
Material: Al, PA6, NBR, Ms
Temperature -10°C...+50°C
SIL: SIL 1-3 (IEC 61508:2010)

MNI52024DC-DM

Version: Bistable
Function: 5/2- or 5/3-way
Ports: G1/4"
ATEX/Zone Zone 1+21,
II 2G Ex dm mb IIC T5 Gb X
II 2D Ex tb IIIC T95°C IP66 Db X

Voltages: 24V DC, 230V AC
Material: Al, PA6, NBR, Ms

Temperature -10°C...+50°C

For more applications, info, and details,
visit our web site or contact Us.

About us

Since 1994 we have been supplying the offshore, land and shipping industries with what they need of process instrumentation, remote valve control, tank gauging equipment and systems. We know how important it is for our customers to get the right equipment for the job. That is why AM Instrumentering AS are providing quality products and service at competitive prices with complete customer satisfaction as our top priority.

CUSTOMER SERVICE
Main Job Tasks and Responsibilities.

Dealing directly with customers either by telephone, electronically or face to face.
Obtain and evaluate all relevant information to handle product and service requests.
With years of experience and expertise in the field regarding Offshore, AM Instrumentering team provide technical support to all costumers requests in order to help and solve any issues that have occurred.
We also undertake, sensor installation, calibration and simulation,
in generally sounding system start up.
Actuator installation directly on board, flow meters support and start up.
For more information's considering all above contact us.

Arild Mork
Manager
Phone: + 47 70 17 69 60
E-mail: arild@aminst.no

Bent Erik Sørheller
Sales Manager
Phone: + 47 70 17 69 64
E-mail: kontor@aminst.no

Michail Askoxylakis
Service Manager
Phone: + 47 70 17 69 65
E-mail: michail@aminst.no